

Order No.:

CM-EX-11A
CM-EX-13A
CM-EX-19A

Overall dimension

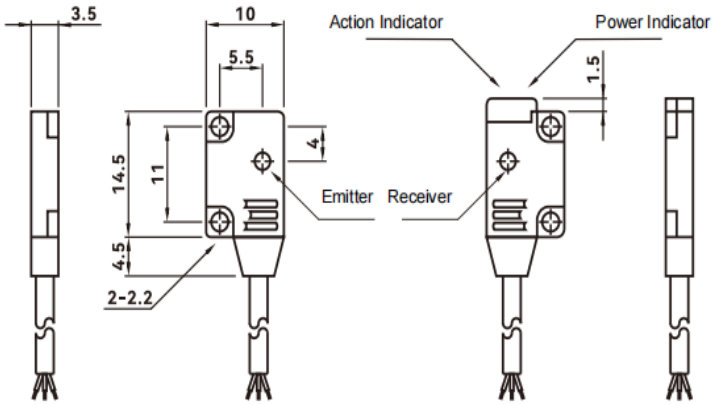

Features

- Built-in Amplifier: Ultra-compact, Ultra-thin
- Red light makes alignment easy.
- Easy install

Wiring

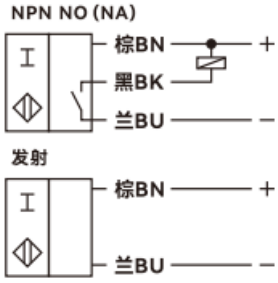

Technical Parameters

General description	
Switch point function	NPN
Rated operating distance Sn	11:150mm,13: 500mm, 19: 1m
Detecting method	Through-beam
Standard detecting object	Opaque Objects above φ2mm
Rated grade	
Rated voltage UB	DC12...24V
Voltage drop Ud	<2V
Response time	<1ms
Circuit protection	Reverse polarity protection、Short-circuit protection
Switching state indication	Power indicator light: Green; Operation indicator light: Orange
Working current	<100mA
Surrounding environment	
Ambient temperature	-25℃...55℃ (No icing, no condensation)
Ambient Illuminance	Sunlight:10000Lx, incandescent light:3000Lx
Ambient humidity	35...95%RH (No condensation)
Mechanical properties	
Wiring	2m standard cable
Shell material	ABS
Sensing surface	Optical PMMA
Protection level	IP65
Withstand voltage	500V AC, 50/60Hz 1 minute between the whole charging part and the shell
Insulation resistance	≥20 MΩ (DC 500 V with a megohmmeter) between the whole charging part and the shell.
Vibration resistance	10～55 Hz, complex amplitude 1.5mm, 2H in X, Y and Z directions
Certification and standards	
Certificates	CE CCC CQC ISO9001 ISO14001 ISO45001
Unit Weight	About 80g

Accessory

Screws*2sets

The datasheet is subject to change without notice.
Copyright Cheemi Tech