

CQC ISO9001

Order No.:

CM-LX-101

Overall dimension

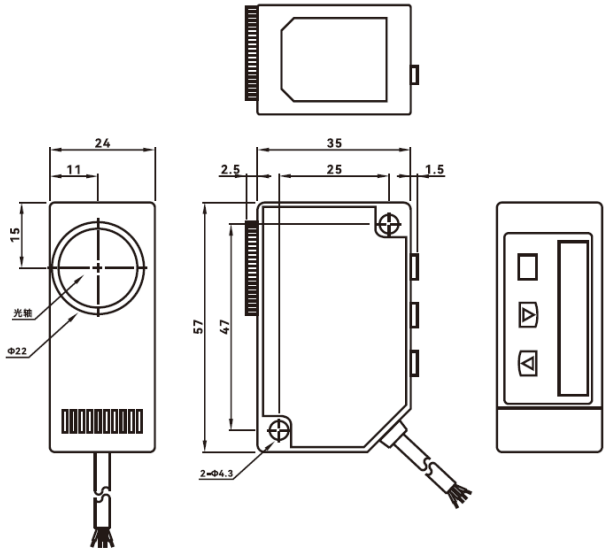

Features

- Coaxial reflection optical system and an ultra-fine spot of approx. 1 mm × 5 mm enable high-precision detection.
- Optimal LED auto-selection function
- Easy setting via digital display

Wiring

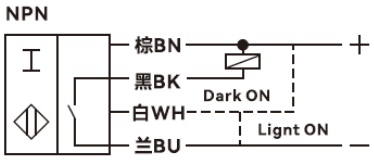

Technical Parameters

General description	
Switch point function	NPN
Method of detection	Color change detection
Rated action distance Sn	< 10mm
Spot size (distance)	rectangular 1×5 mm (at 10 mm), blue
Rated grade	
Rated voltage U_B	DC12-24V
Voltage drop Ud	< 2V
Working current	< 50mA
Response time	<45ms
Circuit protection	Reverse polarity protection、Short-circuit protection
Switching state indication	Four red LEDs display
Surrounding environment	
Ambient temperature	- 25℃~+55℃(no icing)
Ambient humidity	35~95% RH (no condensation)
Ambient lighting	Sunlight: 10,000Lx Incandescent lamp: 3,000Lx
Mechanical properties	
Wiring	2m standard cable
Shell material	Shell: PBT, Display cover: Polycarbonate, Operation button: Silicone
Sensing surface	Lens: Glass, Lens holder: Aluminum
Protection level	IP65
Withstand Voltage	500V AC, 50/60Hz 1 minute between the whole charging part and the shell.
Insulation resistance	≥20 MΩ (DC 500 V with a megohmmeter) between the whole charging part and the shell.
Vibration resistance	Durability: 10～55 Hz, complex amplitude 1.5mm, 2H in X, Y and Z directions
Certification and standards	
Certificates	CE CCC CQC ISO9001 ISO14001 ISO45001
Unit weight	About 82g

Accessory

Screw and nut*2

The datasheet is subject to change without notice. Copyright Cheemi Tech