

CQC ISO9001

## Order No.:

CM-CX441
CM-CX441-P

## Overall dimension

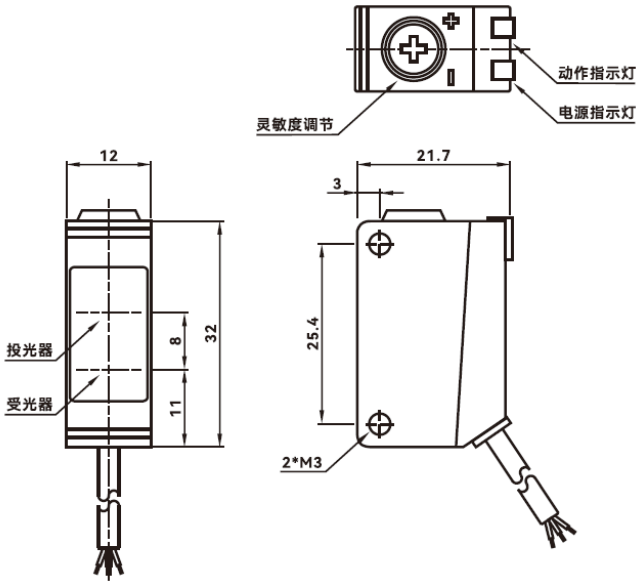


## Features

- High light resistance
- High EMC protection level
- Good quality and high reliability
- Background suppression function

## Wiring

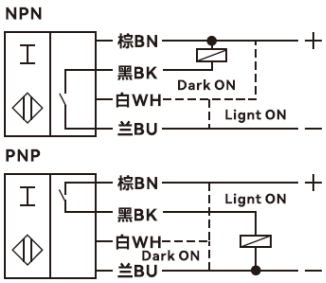


## Technical Parameters

| | |
|---|---|
| **General description** | |
| Switch point function | NPN 、PNP |
| Method of detection | Distance-settable |
| Rated action distance Sn | 2~50 mm(Distance setting range:20~50mm) |
| Standard detector | White paper 100x100mm |
| **Rated grade** | |
| Rated voltage $U_B$ | DC12-24V |
| Voltage drop Ud | ＜2V |
| Working current | ＜100mA |
| Response time | <1ms |
| Circuit protection | Reverse polarity protection、Short-circuit protection |
| Switching state indication | Power stable indicator: green; operation indicator: orange. |
| **Surrounding environment** | |
| Ambient temperature | - 25℃~+55℃(no icing) |
| Ambient humidity | 35~95% RH (no condensation) |
| Ambient lighting | Sunlight: 10,000Lx Incandescent lamp: 3,000Lx |
| **Mechanical properties** | |
| Wiring | 2m standard cable |
| Shell material | ABS |
| Sensing surface | Optical PMMA |
| Protection level | IP65 |
| Withstand Voltage | 500V AC, 50/60Hz 1 minute between the whole charging part and the shell. |
| Insulation resistance | ≥20 MΩ (DC 500 V with a megohmmeter) between the whole charging part and the shell. |
| Vibration resistance | Durability: 10～55 Hz, complex amplitude 1.5mm, 2H in X, Y and Z directions |
| **Certification and standards** | |
| Certificates | CE CCC CQC ISO9001 ISO14001 ISO45001 |
| Unit weight | About 62g |

## Accessory

Screw*2，screwdriver*1，mounting bracket*1

The datasheet is subject to change without notice. Copyright Cheemi Tech