

CQC ISO9001

Order No.:

CM-CCD-NA
CM-CCD-PA

Overall dimension

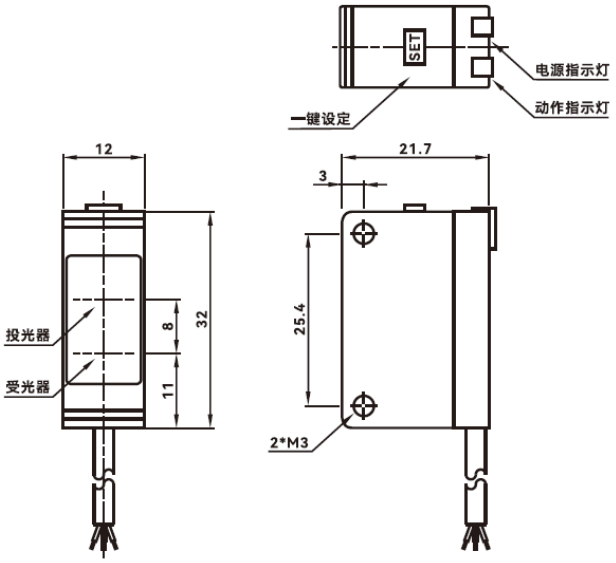

Features

- One-button setup, convenient adjustment, and high ambient light immunity.
- High EMC protection level
- Good quality and high reliability
- Background suppression function

Wiring

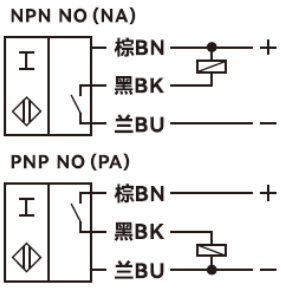

Operation Guide

Aim the sensor at a stationary background and press the SFT button. The output indicator will turn off. Then, any object that comes into the sensor's detection range will trigger an output.

Technical Parameters

General description	
Switch point function	NPN 、PNP
Method of detection	BGS
Rated action distance Sn	< 30 cm
Standard detector	White paper 100x100mm
Rated grade	
Rated voltage U_B	DC12-24V
Voltage drop Ud	< 2V
Working current	< 100mA
Response time	<1ms
Circuit protection	Reverse polarity protection、Short-circuit protection
Switching state indication	Power stable indicator: green; operation indicator: orange.
Surrounding environment	
Ambient temperature	- 25℃~+55℃(no icing)
Ambient humidity	35~95% RH (no condensation)
Ambient lighting	Sunlight: 10,000Lx Incandescent lamp: 3,000Lx
Mechanical properties	
Wiring	2m standard cable
Shell material	ABS
Sensing surface	Optical PMMA
Protection level	IP65
Withstand Voltage	500V AC, 50/60Hz 1 minute between the whole charging part and the shell.
Insulation resistance	≥20 MΩ (DC 500 V with a megohmmeter) between the whole charging part and the shell.
Vibration resistance	Durability: 10～55 Hz, complex amplitude 1.5mm, 2H in X, Y and Z directions
Certification and standards	
Certificates	CE CCC CQC ISO9001 ISO14001 ISO45001
Unit weight	About 62g

Accessory

Screw*2，screwdriver*1，mounting bracket*1

The datasheet is subject to change without notice. Copyright Cheemi Tech