

CQC ISO9001

Order No.:

CM200-BG150NC
CM200-BG150PC

Overall dimension

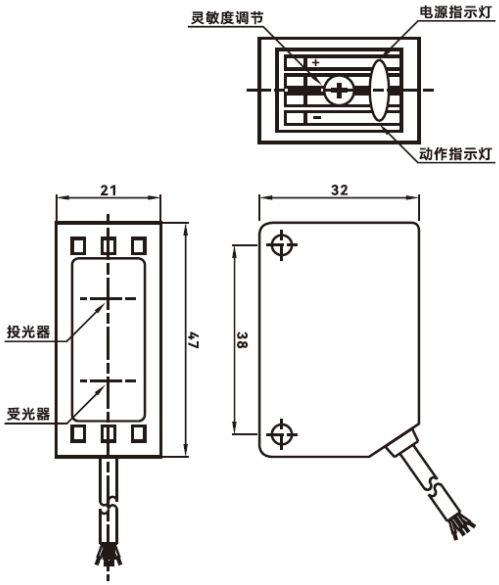

Features

- High light immunity
- High EMC protection level
- Good quality and high reliability
- Background suppression function

Wiring

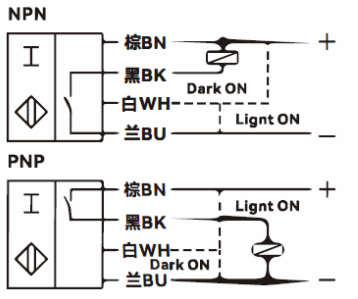

Technical Parameters

General description	
Switch point function	NPN 、PNP
Method of detection	BGS
Rated action distance Sn	100 cm (white to other colors ratio: 10:9), More than 100cm without background suppression function).
Standard detector	White paper 150x150mm
Rated grade	
Rated voltage U_B	DC12-24V
Voltage drop Ud	＜2V
Working current	＜100mA
Response time	<1ms
Circuit protection	Reverse polarity protection、Short-circuit protection
Switching state indication	Power stable indicator: green; operation indicator: orange.
Surrounding environment	
Ambient temperature	- 25℃~+55℃(No icing)
Ambient humidity	35~95% RH (no condensation)
Ambient lighting	Sunlight: 10,000Lx Incandescent lamp: 3,000Lx
Mechanical properties	
Wiring	2m standard cable
Shell material	ABS
Sensing surface	Optical PMMA
Protection level	IP65
Withstand Voltage	500V AC, 50/60Hz 1 minute between the whole charging part and the shell.
Insulation resistance	≥20 MΩ (DC 500 V with a megohmmeter) between the whole charging part and the shell.
Vibration resistance	Durability: 10～55 Hz, complex amplitude 1.5mm, 2H in X, Y and Z directions
Certification and standards	
Certificates	CE CCC CQC ISO9001 ISO14001 ISO45001
Unit weight	About 70g

Accessory

Screw*2，screwdriver*1，mounting bracket*1

The datasheet is subject to change without notice. Copyright Cheemi Tech