

Order No.:

CM-E3JK-TN11

Features

- High resistance to interference
- EMC protection level
- Good quality, high reliability

Wiring

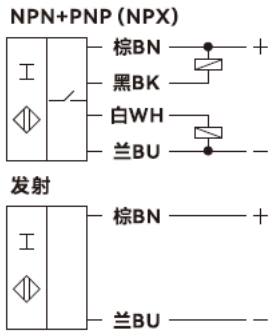

Accessory

Screws and nuts*4, screwdriver*1, mounting bracket*1, reflector plate*1

Overall dimension

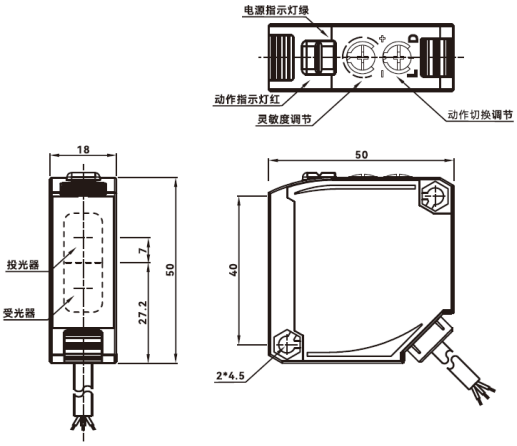

Technical Parameters

General description	
Switch point function	NPN/PNP, NO/NC universal
Method of detection	Through-beam type
Rated operating distance Sn	TN11: 40m
Standard detector	Opaque objects Φ17mm or more
Rated grade	
Rated voltage	DC10~ 30V±10%
Response time	<1ms
Consumption of current	< 30mA
Working current	< 100mA
Circuit protection	Power polarity reverse connection, protection output short circuit prot-
	-ection, function to prevent mutual interference
Switch status indication	Power stability indicator light: Green; action indication: red
Directivity angle	Transmitter and receiver: 3° or more each
Light Source (Luminescence Wavelength)	Red light-emitting diode (624nm)
Sensitivity adjustment	Single-direction knob
Surrounding environment	
Ambient temperature	-25℃~+55℃(No freezing)
Ambient humidity	35~+95%RH(No condensation)
Environmental illumination	Sunlight:10000Lx, incandescent lamp: 3000Lx
Mechanical properties	
Wiring	2m standard cable
Shell material	PBT
Camera lens	Optical PMMA
Protection level	IP65
Withstand Voltage	AC 500V , 50/60Hz 1 minute between the whole charging part and the shell
Insulation resistance	≥20 MΩ (DC 500 V with a megohmmeter) between the whole charging part and the shell
Vibration resistance	10～55 Hz, complex amplitude 1.5mm, 2H in X, Y and Z directions
Certification and standards	
Certification of products	CE CCC CQC ISO9001 ISO14001 ISO45001
Unit weight	About 300g

Copyright Cheemi Tech