

Order No.:

CM-E3JK-TR11
CM-E3JK-TR12

Features

- High resistance to interference
- EMC protection level
- Good quality, high reliability

Wiring

交直流接收

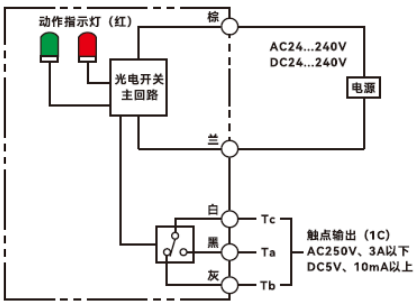

交直流发射

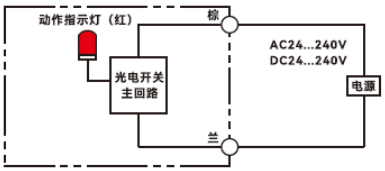

Accessory

Screws and nuts*8, screwdriver*1, mounting bracket*2

Overall dimension

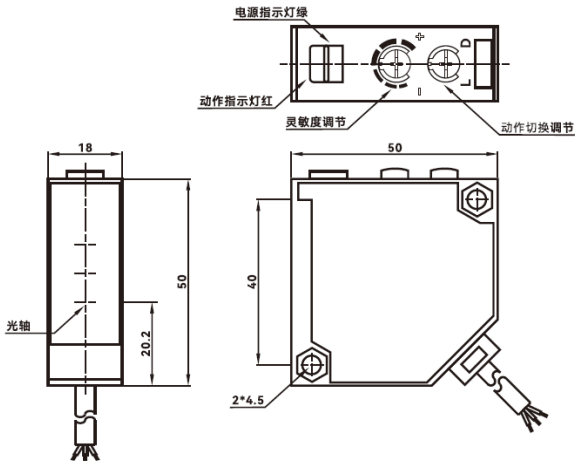

Technical Parameters

General description	
Switch point function	Relay output
Method of detection	Through-beam type
Rated operating distance Sn	TR11: 20m, TR12: 5m
Standard detector	Opaque objects Φ17mm or more
Rated grade	
Rated voltage	AC/DC24 ~ 240V±10%
Response time	<20ms
Consumption of electricity / Consumption of current	< 2W
Working current	Relay output: 1c contact AC 250V 3A (cosφ = 1) below
Circuit protection	The function of preventing mutual interference
Switch status indication	Power stability indicator light: Green; action indication: red
Life (Relay Output)	More than 50 million times (switch frequency 18,000 times per hour)
Light Source (Luminescence Wavelength)	Red light-emitting diode (624nm)
Sensitivity adjustment	Single-direction knob
Surrounding environment	
Ambient temperature	-25℃~+55℃(No freezing)
Ambient humidity	35~+95%RH(No condensation)
Environmental illumination	Sunlight:10000Lx, incandescent lamp: 3000Lx
Mechanical properties	
Wiring	2m standard cable
Shell material	PBT
Camera lens	Optical PMMA
Protection level	IP65
Withstand Voltage	AC 500V , 50/60Hz 1 minute between the whole charging part and the shell
Insulation resistance	10～55 Hz, complex amplitude 1.5mm, 2H in X, Y and Z directions
Vibration resistance	≥20 MΩ (DC 500 V with a megohmmeter) between the whole charging part and the shell
Certification and standards	
Certification of products	CE CCC CQC ISO9001 ISO14001 ISO45001
Unit weight	About 305g

Copyright Cheemi Tech