

Order No.:

CMA-E3Z-T61
CMA-E3Z-T81

Features

- High resistance to interference
- EMC protection level
- Good quality, high reliability

Wiring

NPN

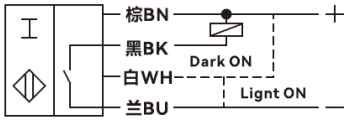

PNP

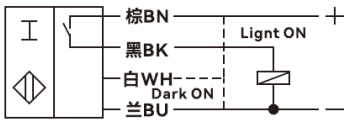

发射



Accessory

Screws*4, screwdriver*1, mounting bracket*1

Overall dimension

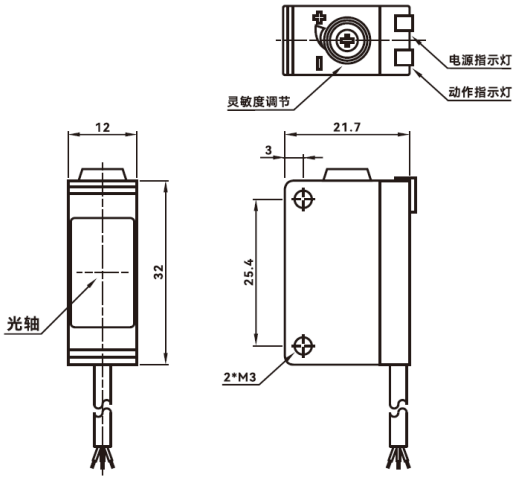

Technical Parameters

General description	
Switch point function	NPN, PNP
Method of detection	Through-beam type
Rated operating distance Sn	20m
Standard detector	Opaque objects Φ7mm or more
Rated grade	
Rated voltage	DC12-24V
Response time	<1ms
Voltage drop	< 2V
Working current	<100mA
Circuit protection	Reverse polarity protection, short circuit protection
Switch state indication	Power stability indicator light: Green; action indication: red
Surrounding environment	
Ambient temperature	-25℃~+55℃(No freezing)
Ambient humidity	35~+95%RH(No condensation)
Environmental illumination	Sunlight:10000Lx, incandescent lamp: 3000Lx
Mechanical properties	
Wiring	2m standard cable
Shell material	ABS
Camera lens	Optical PMMA
Protection level	IP65
Withstand Voltage	AC 500V , 50/60Hz 1 minute between the whole charging part and the shell
Insulation resistance	≥20 MΩ (DC 500 V with a megohmmeter) between the whole charging part and the shell
Vibration resistance	10～55 Hz, complex amplitude 1.5mm, 2H in X, Y and Z directions
Certification and standards	
Certification of products	CE CCC CQC ISO9001 ISO14001 ISO45001
Unit weight	About 115g

Copyright Cheemi Tech