

Order No.:

CMA-E3Z-R61
CMA-E3Z-R81

Features

- High resistance to interference
- EMC protection level
- Good quality, high reliability

Wiring

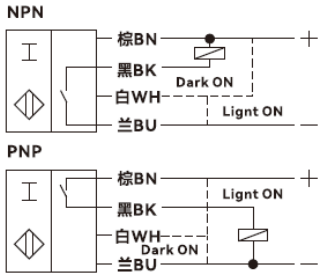

Accessory

Screws*1,screwdriver*1, mounting bracket*1, reflector plate *1

Overall dimension

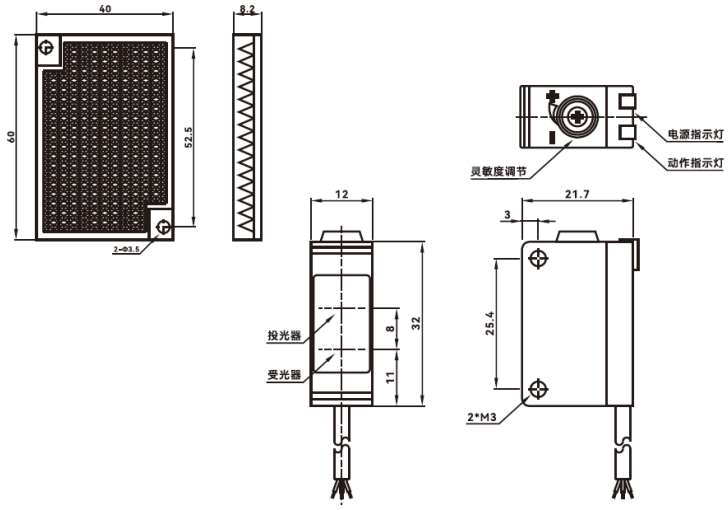

Technical Parameters

General description	
Switch point function	NPN, PNP
Method of detection	Regressional reflection type
Rated operating distance Sn	4m
Standard detector	Opaque objects Φ75mm or more
Rated grade	
Rated voltage	DC12-24V
Response time	<1ms
Voltage drop	< 2V
Working current	<100mA
Circuit protection	Reverse polarity protection, short circuit protection
Switch state indication	Power stability indicator light: Green; action indication: red
Surrounding environment	
Ambient temperature	-25℃~+55℃(No freezing)
Ambient humidity	35~+95%RH(No condensation)
Environmental illumination	Sunlight:10000Lx, incandescent lamp: 3000Lx
Mechanical properties	
Wiring	2m standard cable
Shell material	ABS
Camera lens	Optical PMMA
Protection level	IP65
Withstand Voltage	AC 500V , 50/60Hz 1 minute between the whole charging part and the shell
Insulation resistance	≥20 MΩ (DC 500 V with a megohmmeter) between the whole charging part and the shell
Vibration resistance	10～55 Hz, complex amplitude 1.5mm, 2H in X, Y and Z directions
Certification and standards	
Certification of products	CE CCC CQC ISO9001 ISO14001 ISO45001
Unit weight	About 80g

Copyright Cheemi Tech