

Order No.:

CM-E3FA-TN11
CM-E3FA-TN12
CM-E3FA-TP11
CM-E3FA-TP12

Features

- High resistance to light interference
- EMC protection level
- High quality and reliability

Wiring

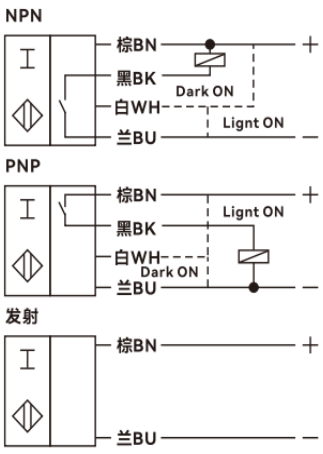

Accessory

Toothed nut *4，Screwdriver*1

Overall dimension

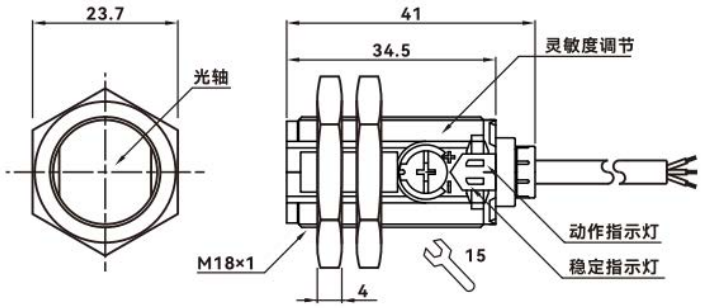

Technical Parameters

General description	
Switch point function	NPN 、PNP
Detection Type	Opposite type
Rated operating distance	11:20m,12:15m
Standard detector	More than 7mm in opaque bodies
Rated grade	
Rated voltage	DC10~30V
Voltage Drop	<2V
Working current	<100mA
Response time	<1mS
Circuit protection	Reverse polarity protection、Short-circuit protection
Switch status indication	Red LED indicator
Surrounding environment	
Ambient temperature	-25℃...70℃（No icing, no condensation）
Ambient humidity	35...95%RH（No condensation）
Ambient light	Solar luminosity:1000Lx,Incandescent light:3000Lx
Switch status indication	Red LED indicator
Mechanical properties	
Wiring	2M standard cable
Shell material	ABS
Sensing surface	Optical PMMA
Withstand Voltage	500V AC, 50/60Hz 1 minute between the whole charging part and the shell
Insulation resistance	≥20 MΩ (DC 500 V with a megohmmeter) between the whole charging part and the shell.
Vibration resistance	10-55Hz, complex amplitude 1.5mm, 2 hours in each direction of X,Y and Z
Protection level	IP 65
Certification and Standards	
Product certification	CE CCC CQC ISO9001 ISO14001 IS045001
Unit Weight	105g

The datasheet is subject to change without notice.

Copyright Cheemi Tech