

Order No.:

CM-E3FA-DN11
CM-E3FA-DN12
CM-E3FA-DN13
CM-E3FA-DP11
CM-E3FA-DP12
CM-E3FA-DP13

Features

- High resistance to light interference
- EMC protection level
- High quality and reliability

Wiring

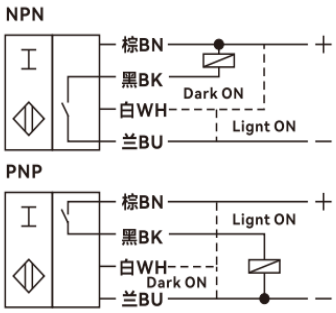

Accessory

Toothed nut *2，Screwdriver*1

Overall dimension

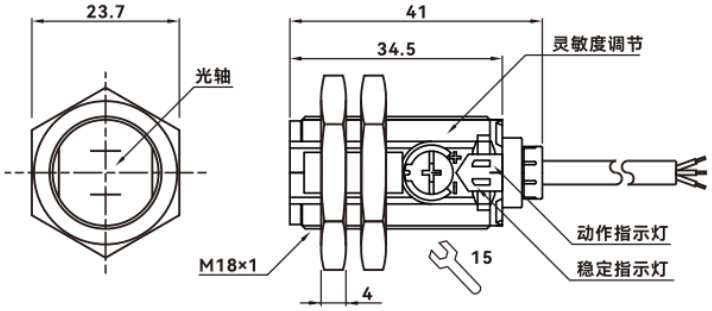

Technical Parameters

General description	
Switch point function	NPN 、PNP
Detection Type	Diffuse reflection type
Rated operating distance	11:100mm/12:300mm/13:1m
Standard detector	100*100 (White board)
Rated grade	
Rated voltage	DC10~30V
Voltage Drop	<2V
Working current	<100mA
Response time	<1mS
Circuit protection	Reverse polarity protection、Short-circuit protection
Switch status indication	Red LED indicator
Surrounding environment	
Ambient temperature	-25℃...55℃ (Non-freezing, no condensation)
Ambient humidity	35...95%RH (No condensation)
Ambient light	Solar luminosity:1000Lx,Incandescent light:3000Lx
Switch status indication	Red LED indicator
Mechanical properties	
Wiring	2M standard cable
Shell material	ABS
Sensing surface	Optical PMMA
Withstand Voltage	500V AC, 50/60Hz 1 minute between the whole charging part and the shell
Insulation resistance	≥20 MΩ (DC 500 V with a megohmmeter) between the whole charging part and the shell.
Vibration resistance	10-55Hz, complex amplitude 1.5mm, 2 hours in each direction of X,Y and Z
Protection level	IP 65
Certification and Standards	
Product certification	CE CCC CQC ISO9001 ISO14001 IS045001
Unit Weight	52g

The datasheet is subject to change without notice.

Copyright Cheemi Tech