

Order No.:

CJUB75-80Q-NC
CJUB75-80Q-PC
CJUB75-80Q-DA
CJUB75-80Q-DB
CJUB75-80Q-ADA
CJUB75-80Q-ADB

Features

- Dedicated circuit, stable detection distance, strong anti-interference
- Use fold-resistant, oil-resistant cables.

Wiring

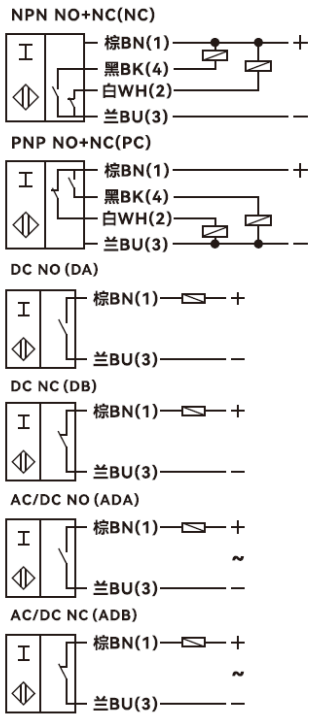

Accessory

Screw*4sets

Overall dimension

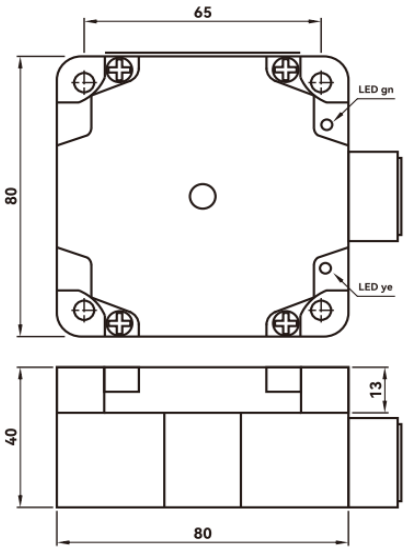

Technical Parameters

General description	
Switch point function	NPN、PNP 、G DG
Rated operating distance Sn	75mm
Installation	Non-flush mounting
Standard detector	120*120*1t(Q253A)
Reliable operating distance Sa	0...60mm
Rated grade	
Rated voltage UB	NPN/PNP/D :DC:10...30VDC , AD:AC/DC:24-250V
Switching frequency f	NPN/PNP/D:0.1kHz , AD:40Hz
Hysteresis range	≤ 15% of sensing distance
Repeatability	<3% of detection distance
No load current Io	<12mA
Leakage current Ir	0...100uA
Voltage drop Ud	NPN/PNP/D:<2.0V, D:<3.0V, AD:<6V
Working current IL	NPN/PNP:<200mA, D:<100mA, AD:<300mA
Circuit protection	Reverse polarity protection、Short-circuit protection ， surge absorption
Switching state indication	Red LED indicator
Surrounding environment	
Ambient temperature	-25℃...70℃ （No icing, no condensation）
Temperature effect	-25 ℃... 70 ℃, within 15% of detection distance at+24 ℃
Ambient humidity	35...95%RH(No condensation)
Influence of voltage	<3%
Mechanical properties	
Wiring	Terminal blocks
Shell material	PBT
Sensing surface	PBT
Protection level	IP66
Withstand voltage	500V AC, 50/60Hz 1 minute between the whole charging part and the shell
Insulation resistance	≥20 MΩ (DC 500 V with a megohmmeter) between the whole charging part and the shell.
Vibration resistance	10～55 Hz, complex amplitude 1.5mm, 2H in X, Y and Z directions
Certification and standards	
Certificates	CE CCC CQC ISO9001 ISO14001 ISO45001
Unit Weight	About 430g

The datasheet is subject to change without notice.
Copyright Cheemi Tech