

Order No.:

CM-NBN20-L2-A0-V1
CM-NBN20-L2-A2-V1
CM-NBN20-L2-D1-V1
CM-NBN20-L2-D2-V1

Features

- Dedicated circuit, stable detection distance, strong anti-interference.
- Use fold-resistant, oil-resistant cables.

Wiring

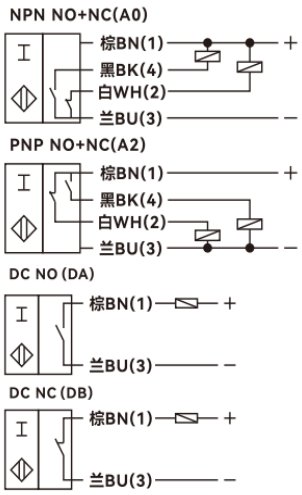

Overall dimension

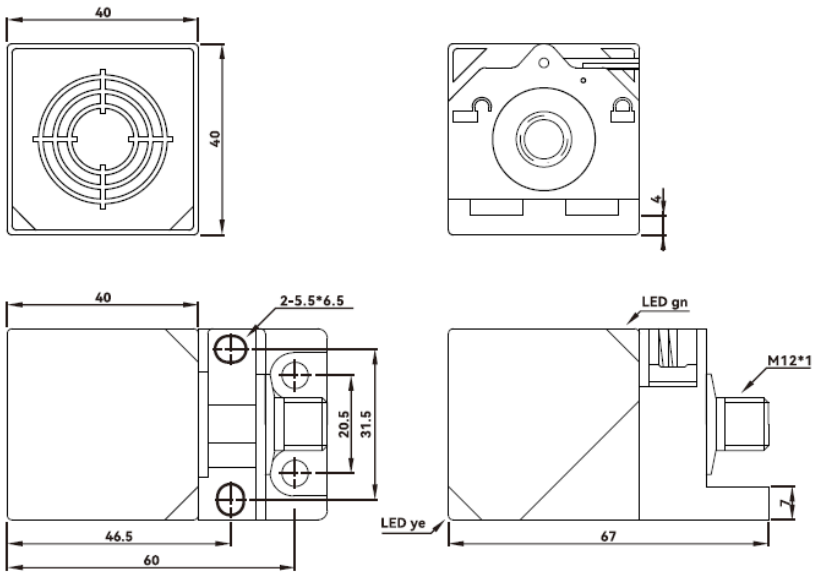

Technical Parameters

General description	
Switch point function	NPN 、PNP 、D
Rated operating distance Sn	20mm
Installation	Non-flush mounting
Standard detector	60*60*1t(Q253A)
Reliable operating distance Sa	0...16mm
Rated grade	
Rated voltage U_B	10...30VDC
Switching frequency f	0.1KHz
Hysteresis range	1-15% of detection distance
Repeatability	<3% of detection distance
No load current Io	<12mA
Leakage current Ir	<100uA
Voltage drop Ud	NPN/PNP:<2.0V;D:<3.0V
Working current IL	NPN/PNP<200mA;D:<100mA
Circuit protection	Reverse polarity protection、Short-circuit protection ，surge absorption
Switching state indication	Power: green LED indicator, action: yellow LED indicator
Surrounding environment	
Ambient temperature	-25℃...70℃（No icing, no condensation）
Temperature effect	-25 ℃...+70 ℃, within 15% of detection distance at+24 ℃
Ambient humidity	35...95%RH no condensation
Influence of voltage	<3%
Mechanical properties	
Wiring	Connector
Shell material	ABS
Sensing surface	ABS
Protection level	IP67
Withstand voltage	500V AC, 50/60Hz 1 minute between the whole charging part and the shell
Insulation resistance	≥20 MΩ (DC 500 V with a megohmmeter) between the whole charging part and the shell.
Vibration resistance	10～55 Hz, complex amplitude 1.5mm, 2H in X, Y and Z directions
Certification and standards	
Certificates	CE CCC CQC ISO9001 ISO14001 ISO45001
Unit Weight	About 150g

Accessory

Screw*2 sets

The datasheet is subject to change without notice.
Copyright Cheemi Tech