

## Order No.:

CJUB8-10Q-NA
CJUB8-10Q-NB
CJUB8-10Q-PA
CJUB8-10Q-PB
CJUB8-10Q-DA
CJUB8-10Q-DB

## Features

- Complete specifications, with short circuit protection and reverse connection protection
- Dedicated IC, stable detection distance, rich product specifications
- Use fold-resistant, oil-resistant wire

## Wiring

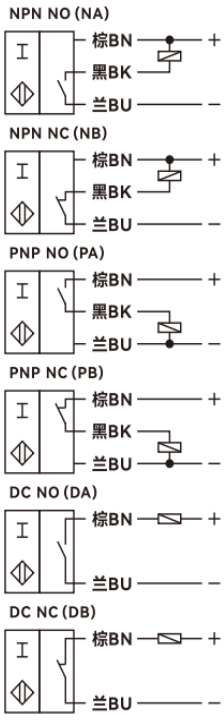


## Accessory

Screw*2sets

## Overall dimension

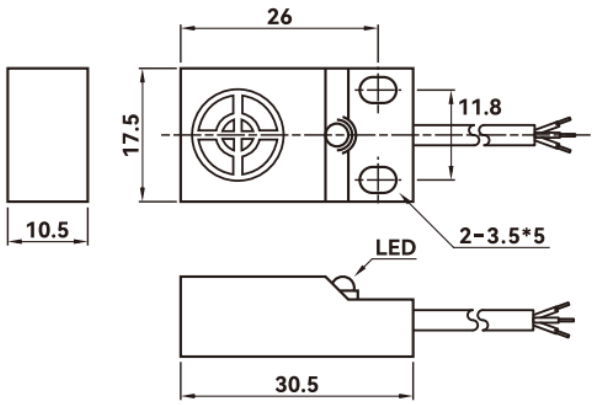


## Technical Parameters

| | |
|---|---|
| **General description** | |
| Switch point function | NPN NO、NPN NC、PNP NO、PNP NC、D |
| Rated operating distance Sn | 8mm |
| Installation | Non-flush mounting |
| Standard detector | 36*36*1t(Q253A) |
| Reliable operating distance Sa | 0...6.4mm |
| **Rated grade** | |
| Rated voltage UB | 10...30VDC |
| Switching frequency f | 0.3KHz |
| Hysteresis range | 1-15% of detection distance |
| Repeatability | <3% of detection distance |
| No load current Io | <12mA |
| Leakage current Ir | 0...100uA |
| Voltage drop Ud | NPN/PNP:<2.0V，DC<3.0V |
| Working current IL | NPN/PNP<200mA;DC<100mA |
| Circuit protection | Reverse polarity protection, short-circuit protection, surge absorption |
| Switch status indication | Red LED indicator |
| **Surrounding environment** | |
| Ambient temperature | -25℃...70℃ (No icing, no condensation) |
| Temperature effect | -Within 25 ℃... 70 ℃, within 10% of detection distance at+24 ℃ |
| Ambient humidity | 35...95%RH no condensation |
| Influence of voltage | <3% |
| **Mechanical properties** | |
| Wiring | Standard wire 2m |
| Shell material | PBT |
| Sensing surface | PBT |
| Protection level | IP67 |
| Withstand voltage | 500V AC, 50/60Hz 1 minute between the whole charging part and the shell |
| Insulation resistance | ≥20 MΩ (DC 500 V with a megohmmeter) between the whole charging part and the shell. |
| Vibration resistance | 10～55 Hz, complex amplitude 1.5mm, 2H in X, Y and Z directions |
| **Certification and standards** | |
| Certificates | CE CCC CQC ISO9001 ISO14001;ISO45001 |
| Weight | 55g |

The datasheet is subject to change without notice. Copyright Cheemi Tech