

Order No.:

CJUA5-10Q-NA
CJUA5-10Q-NB
CJUA5-10Q-PA
CJUA5-10Q-PB
CJUA5-10Q-DA
CJUA5-10Q-DB

Features

- Dedicated circuit, stable detection distance, strong anti-interference
- Use fold-resistant, oil-resistant cables.

Wiring

NPN NO (NA)

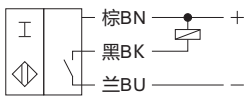

NPN NC (NB)

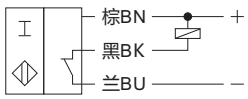

PNP NO (PA)

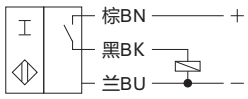

PNP NC (PB)

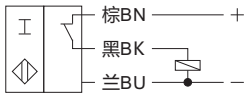

Accessory

Screw*2sets

Overall dimension

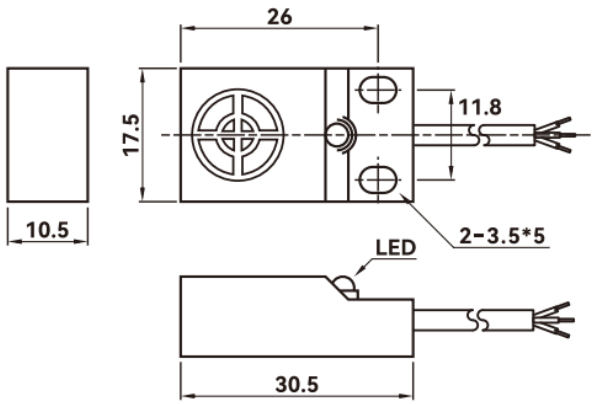

Technical Parameters

General description	
Switch point function	NPN，PNP，D
Rated operating distance Sn	5mm
Installation	Non-flush mounting
Standard detector	18*18*1t(Q253A)
Reliable operating distance Sa	0...4mm
Rated grade	
Rated voltage UB	10...30VDC
Switching frequency f	0.6KHz
Hysteresis range	Within 15% of the detection distance
Repeatability	<3% of detection distance
No load current Io	<12mA
Leakage current Ir	0...100uA
Voltage drop Ud	NPN/PNP:<2.0V，DC<3.0V NPN/
Working current IL	PNP<200mA;DC<100mA
Circuit protection	Reverse polarity protection, output short circuit protection, surge absorption
Switching state indication	Red LED indicator
Surrounding environment	
Ambient temperature	-25℃...70℃ (No icing, no condensation)
Temperature effect	-Within 25 ℃... 70 ℃, within 10% of detection distance at+24 ℃
Ambient humidity	35...95%RH no condensation
Influence of voltage	<3%
Mechanical properties	
Wiring	2m standard cable
Shell material	PBT
Sensing surface	PBT
Protection level	IP67
Withstand voltage	500V AC, 50/60Hz 1 minute between the whole charging part and the shell
Insulation resistance	≥20 MΩ (DC 500 V with a megohmmeter) between the whole charging part and the shell.
Vibration resistance	10～55 Hz, complex amplitude 1.5mm, 2H in X, Y and Z directions
Certification and standards	
Certificates	CE CCC CQC ISO9001 ISO14001 ISO45001
Unit weight	About 55g

The datasheet is subject to change without notice.
Copyright Cheemi Tech