

Order No.:

CJMY1.8-12M-NAH-60
CJMY1.8-12M-NBH-60
CJMY1.8-12M-PAH-60
CJMY1.8-12M-PBH-60

Features

- Dedicated IC, stable detection distance, strong anti-interference ability.
- The detection surface is made of speciality Nylon, which is durable and long-lasting.
- Position feedback for hydraulic cylinders.
- Pressure resistance up to 500 bar.

Wiring

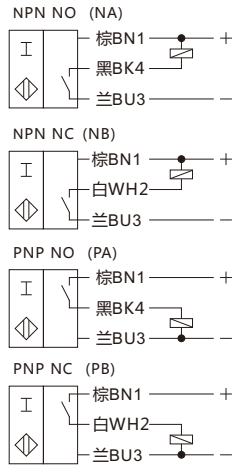

Installation method

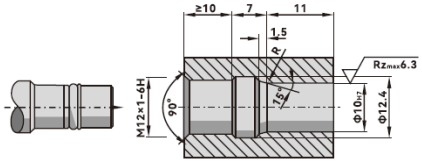

Accessory

O- ring*1, washer*1

Overall dimension

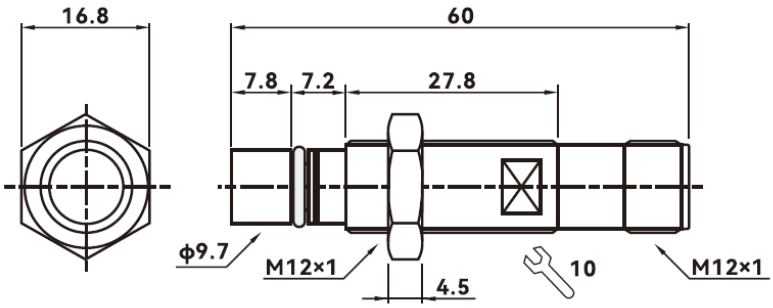

Technical Parameters

General description	
Switch point function	NPN 、PNP
Rated operating distance Sn	1.8mm
Installation	Flush mounting
Standard detector	12*12*1t(Q253A)
Reliable operating distance Sa	0...1.5mm
Rated grade	
Rated voltage U_B	DC:10...30V
Switching frequency f	1KHz
Hysteresis range	≤ 15% of sensing distance
Repeatability	<3% of detection distance
No load current Io	<12mA
Voltage drop Ud	<2V
Working current IL	<200mA
Leakage current Ir	0...100uA
Circuit protection	Reverse polarity protection, short circuit protection,
Switching state indication	Red LED indicator
Surrounding environment	
Ambient temperature	-25℃...70℃ （No icing, no condensation）
Temperature effect	-Within 25 ℃... 70 ℃, within 10% of detection distance at+24 ℃
Ambient humidity	35...95%RH,no condensation
Influence of voltage	<3%
Mechanical properties	
Wiring	Connector
Shell material	Stainless steel
Sensing surface	Specialty Nylon
Protection level	IP68
Withstand voltage	500V AC, 50/60Hz 1 minute between the whole charging part and the shell
Insulation resistance	≥20 MΩ (DC 500 V with a megohmmeter) between the whole charging part and the shell.
Vibration resistance	10～55 Hz, complex amplitude 1.5mm, 2H in X, Y and Z directions
Compressive strength [bar]	500
Peak pressure [bar]	1000
Minimum blasting pressure [bar]	2000
Tightening torque [Nm]	<15
Certification and Standards	
Product certification	CE CCC CQC ISO9001 ISO14001 ISO45001
Unit Weight	About 35g

The datasheet is subject to change without notice.
Copyright Cheemi Tech