

CE CQC ISO9001

Order No.:

CJMG10-30M-NA-150℃
CJMG10-30M-NB-150℃
CJMG10-30M-PA-150℃
CJMG10-30M-PB-150℃
CJMG10-30M-DA-150℃
CJMG10-30M-DB-150℃
CJMG10-30M-ADA-150℃
CJMG10-30M-ADB-150℃

Features

- Plug in dedicated IC, stable ultra long detection distance, strong anti-interference ability.
- Using high-temperature silicone cable.
- High-temperature resistant sensing face for excellent environmental durability.

Wiring

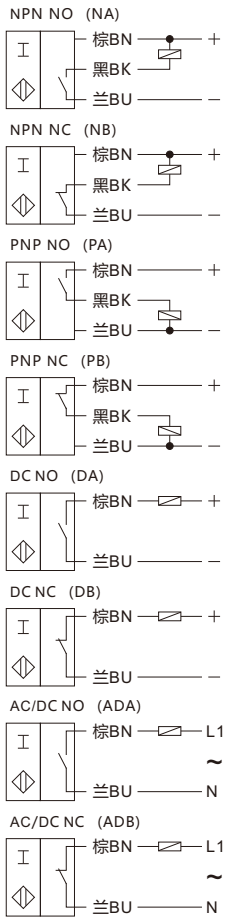

Accessory

Toothed nut*2

Overall dimension

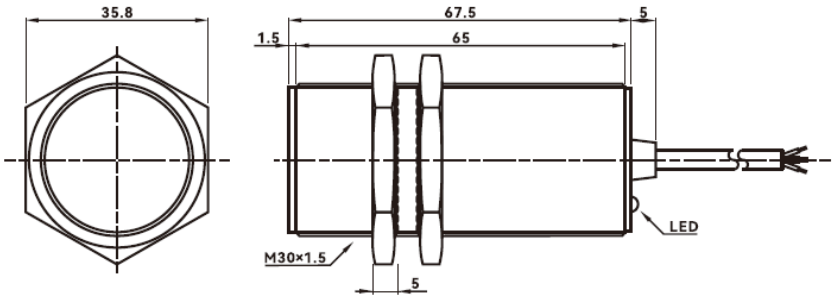

Technical Parameters

General description	
Switch point function	NPN 、PNP 、D、AD
Rated operating distance Sn	10mm
Installation	Flush mounting
Standard detector	30*30*1t(Q253A)
Reliable operating distance	0...8mm
Rated grade	
Rated voltage U_B	NPN/PNP/D :DC:10...30V , AD:AC/DC:24-250V
Switching frequency f	NPN/PNP/D:0.25KHz , AD:40Hz
Hysteresis range	≤15% of detection distance
Repeatability	<3% of detection distance
No load current Io	<12mA
Voltage drop Ud	NPN/PNP:<2V, D:<3V , AD:<6V
Working current	NPN/PNP:<200mA , D:<100mA , AD:<300mA
Leakage current	< 100uA
Circuit protection	Reverse polarity protection、Short-circuit protection、Surge absorption
Switching state indication	Red LED indicator light
Surrounding environment	
Ambient temperature	-25℃...150℃ (No icing, no condensation)
Temperature effect	-Within -25 ℃... 150 ℃, within 20% of detection distance at+24 ℃
Ambient humidity	35...95%RH(no condensation)
Influence of voltage	<3%
Mechanical properties	
Wiring	2m standard cable
Shell material	Brass plated with pearl nickel
Sensing surface	PBT
Protection level	IP67
Withstand Voltage	500V AC, 50/60Hz 1 minute between the whole charging part and the shell.
Insulation resistance	≥20 MΩ (DC 500 V with a megohmmeter) between the whole charging part and the shell.
Vibration resistance	10～55 Hz, complex amplitude 1.5mm, 2H in X, Y and Z directions
Certification and Standards	
Product certification	CE CCC CQC ISO9001 ISO14001 ISO45001
Unit weight	About 215g

The datasheet is subject to change without notice.
Copyright Cheemi Tech